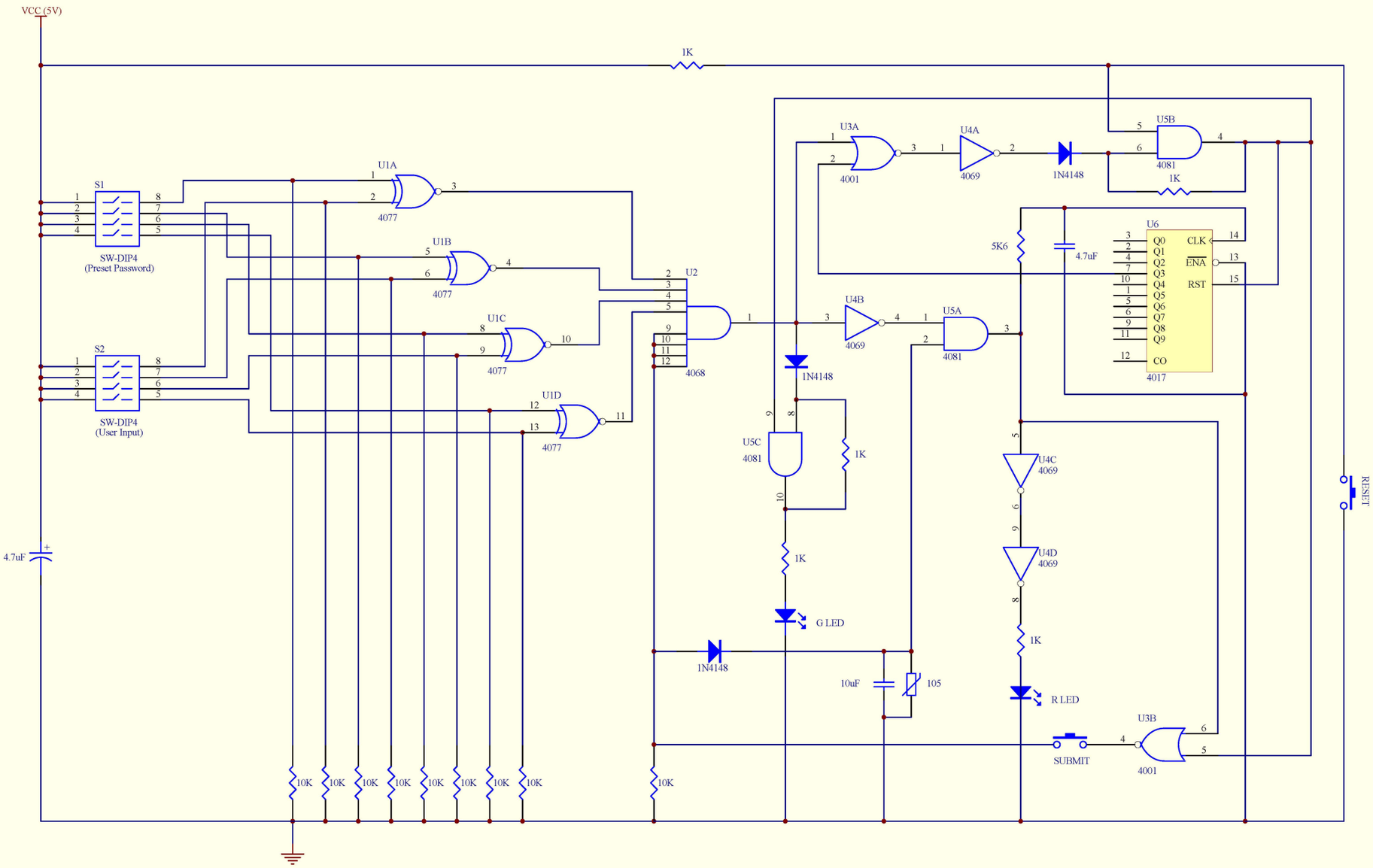

4 位二進制密碼鎖（進階版）參考電路*
Advanced 4 Bit Combination Lock

創科小淘氣
The Little Electronics Mischief
https://elec-mischief.blogspot.com

* 不設開機後自動重置功能 Without Auto-reset